The 492 c.c. B.M.W. Flat Twin

Full Details of a Highly Successful Horizontally Opposed Twin-cylinder o.h.c. Power Unit Incorporating Fuel Injection

Exclusive Description by ALAN BAKER, B.Sc., A.M.I.Mech.E.

RACING ENGINES

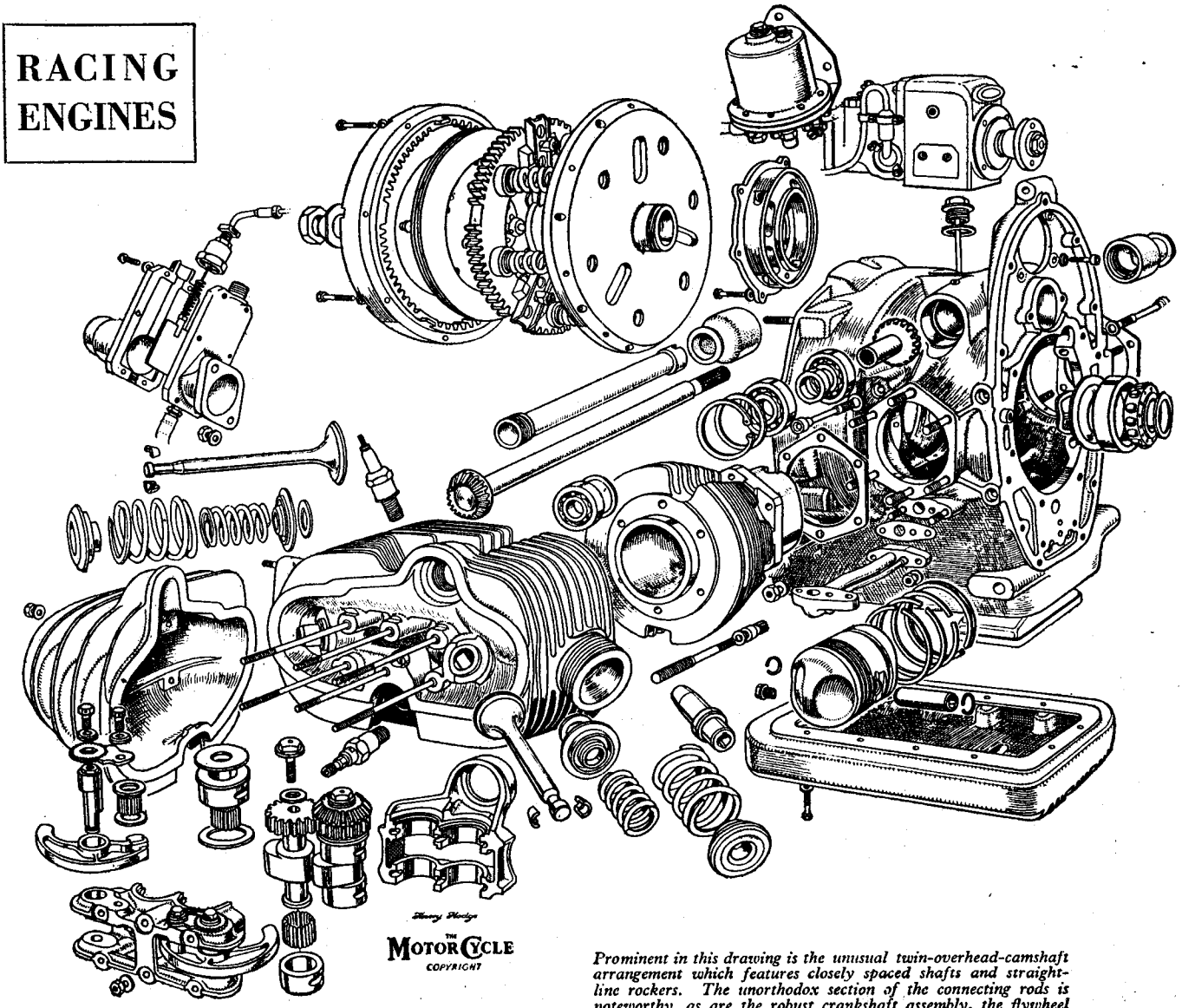

Prominent in this drawing is the unusual twin-overhead-camshaft arrangement which features closely spaced shafts and straight-line rockers. The unorthodox section of the connecting rods is noteworthy, as are the robust crankshaft assembly, the flywheel clutch and the use of four rings on each piston. The fuel-injection pump is located on the front cover, and the injector nozzles screw directly into the cylinder heads, below the cam gear

IN 1939, B.M.W.s made Isle of Man history by becoming the first German firm to win the Senior T.T.; Georg Meier, on the supercharged flat twin, won the race at record speed and Jock West, on a similar machine, was second. Since the war, B.M.W. racing interest has gradually shifted from solos to sidecars and, in 1954, the Noll-Cron team secured the World's Championship in the sidecar class with a B.M.W. outfit. Had Eric Oliver not been eliminated by a mid-season crash, the Championship result might have been different, but the German twin was undoubtedly extremely fast and utterly reliable.

The five-hundred B.M.W. has a lengthy genealogy extending back to 1923, when the first flat twin was built and raced; this ancestor had a side-valve engine. Two years later the overhead-valve engine appeared, to continue with progressive development until 1935, when the supercharged double-overhead-camshaft unit was introduced. It made its début in the Island in 1937, the year in which Ernst Henne regained the world's maximum speed record on a streamlined version.

Apart from the absence of a supercharger, the 1954 racing engines are fundamentally very similar to the pre-war units. To that generalization, however, must be made a very notable qualification, namely, fuel injection, which first appeared early in the 1953 racing season and was employed by Walter Zeller in that year's Senior T.T. Zeller lay ninth after the first lap but then came off, damaging his machine too seriously to continue.

There have been three stages in the development of the fuel injection: in the case of each cylinder head, at first the injector nozzle was mounted between the throttle slide and inlet port, spraying into the induction tract at an angle. Then came the layout used in the I.o.M. in 1953 in which the injector was mounted in the induction bellmouth, upstream of the throttles and injecting axially. Finally —last season—the nozzle was transferred to the cylinder head opposite the sparking plug. Removal of obstruction from the inlet system improved the cylinder charging appreciably and thus resulted in increased power output.

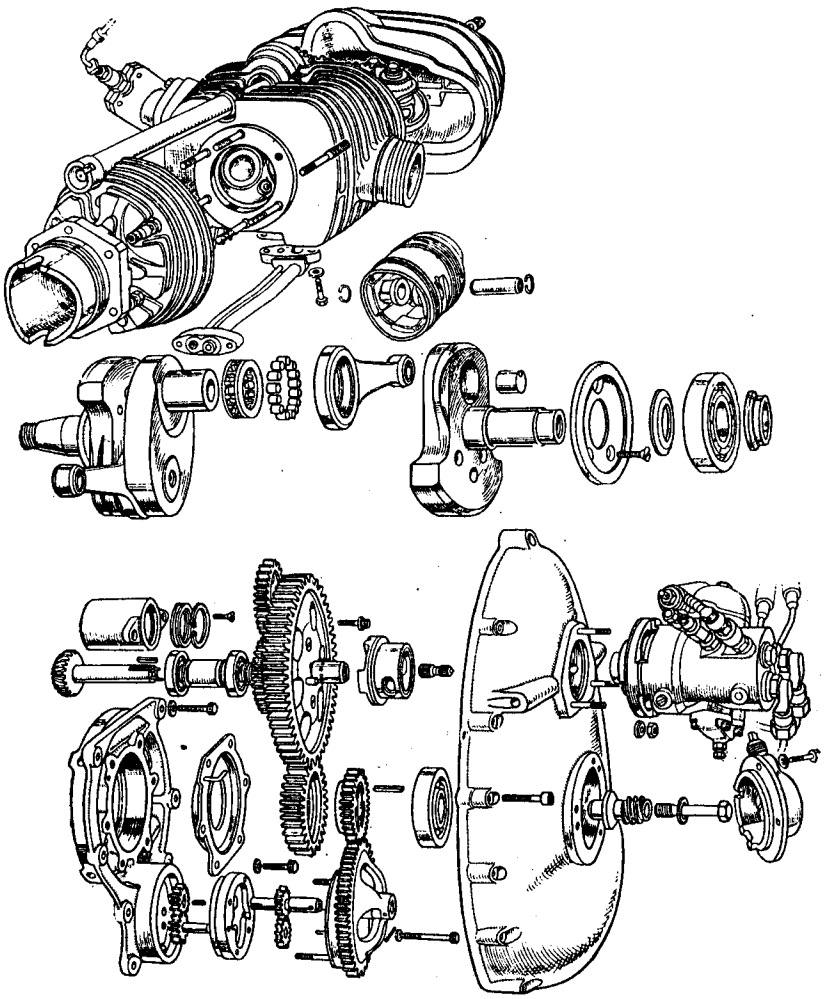

At first sight, the dismantled 1954 B.M.W. factory engine gives the impression of sturdy orthodoxy. While closer study confirms the impression in many respects, it also reveals a number of unexpected features, both of detail and of basic design.

The crankshaft, with its 180-degree throws and 72mm stroke (bore is 66mm), is of built-up construction embodying no threads. Mainshafts are hollow and are integral with their crank cheeks which embody balance weights. Each crankpin hole in the elliptical medial web of the shaft has a shallow counterbore on the side of the web adjacent to the respective big end. Radius of the counterbore is greater than that of the end of the web and of the big-end eye, so that the shaft overall length is kept to minimum.

Like the mainshafts, the hollow crankpins are of 35mm diameter; one end of each is pressed into the medial web and locked in position by a solid, forced-in expander plug. After the big-end bearings and connecting rods have been assembled on the pins, the cheeks are pressed on and further expander plugs driven in. The plugs at the outer end of the pins differ from those at the inner end in having a small longitudinal hole for big-end lubrication.

The crankshaft runs in three bearings: at the rear is a self-aligning bearing embodying rollers shaped like shortened rugby balls; there is a ball bearing at the front of the crankshaft and another, of smaller diameter, in the front cover as outboard support for the timing pinion.

The one-piece crankcase is an Elektron casting. To obviate any chance of their loosening when hot, the two 35mm main bearings are pressed into housings separate from the case. Cast iron is used for the forward bearing housing and steel for the rear housing; both have a shallow spigot which is a press fit in the case, and both are secured by longitudinal bolts through the flange and also by four transverse bolts. The transverse bolts screw in from each side of the crankcase, one co-axial pair above and one below the crank axis.

Embodied in the forward main-bearing housing is the rear wall of the oil pump; the light-alloy body carrying the gears fits into a recess in the housing to which it is bolted. The pump is of the duplex gear type, one section of which feeds the main and big-end bearings while the other supplies the cam gear. Oil (S.A.E.40 viscosity) is taken through a gauze suction filter from a 2.8-litre sump, also of Elektron, bolted to the base of the crankcase and well finned for cooling.

Lubricant for the cam gear flows from the pump through oilways in the crankcase to external pipes which lie below the cylinder barrels; the pipes are flanked by larger-diameter pipes through which oil returns to the sump.

Oil from the other pump emerges from each main-bearing housing into a trap secured by screws to the adjacent face of each crank cheek. The trap is basically of disc form but has the periphery turned inward through 180 degrees to form an

annular channel. Oil from the bearing housing is centrifuged into the channel; thence it reaches the big end through a hole in the trap wall communicating with the previously mentioned hole in the crankpin plug. Each of the crankpins has twin radial holes and, since they are directed outward, the oil flow has the maximum centrifugal assistance.

The layout minimizes internal oilways which could weaken the crankshaft assembly. It also simplifies building up the shaft because no holes have to be aligned. Furthermore, the traps act as very efficient centrifugal filters, which is why only the gauze suction strainer is needed.

Highly unorthodox is the use of a flat section instead of an I section for the connecting-rod body between the big and small ends. The rod is relatively short—about 180 per cent of the stroke—and the B.M.W. technicians are unperturbed by any possibility of whip resulting from the absence of flanges. I-section rods have been tried but have been found more prone to failure, from fatigue cracks starting at the radius between flange and web. The flat section, which is about ⅛in thick, has proved entirely satisfactory and is, of course, very easy to polish.

Each big-end bearing comprises 14 rollers of 10×7mm running directly on the crankpin and in the big-end eye; both pin and eye have hardened surfaces. Guiding the rollers is a Duralumin cage, the periphery of which is relieved slightly for the whole width of the roller track. In the bore of the cage the bars are relieved over part of their length to assist the spread of oil, an action which is aided by shallow, radial grooves midway along each side of each bar. The oil holes in the crankpin are so spaced that lubricant is fed to the rubbing faces of the cage bore before reaching the rollers.

Within the gear case on the front of the engine are three pairs of spur gears. A steel gear on the crankshaft drives a light-alloy half-speed gear immediately above it; the gears are lubricated by jet from the front main-bearing housing. Also on the crankshaft is a steel gear meshing with the light-alloy oil-pump driving gear. It has been found necessary to embody a cush-drive in the steel gear to avoid tooth breakage of the light-alloy gear from the loading produced by violent acceleration or deceleration of the crankshaft.

A steel gear on the half-speed shaft meshes with the light-alloy magneto gear; this last has slotted fixing holes for timing adjustment. In front of the half-speed gear and driven therefrom by two pegs is a ported sleeve which runs in the Elektron front cover and serves as a timed breather; at the appropriate time the sleeve ports align with holes in the cover which lead to atmosphere.

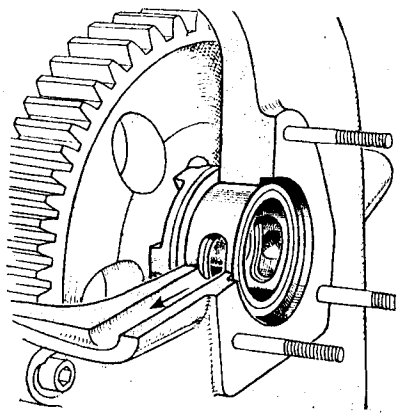

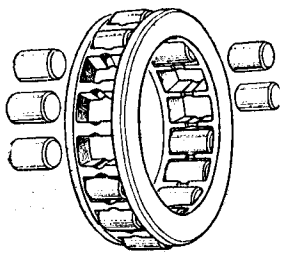

Three interesting internal details: (left) the engine breather, driven from the half-speed timing gear; (above) the single-row roller big-end bearing cage, the bars of which are relieved for lubrication purposes; and (below right) thickened-up gudgeon-pin bosses and oil-return slots in the full-skirt piston. Four rings are fitted

Within the breather sleeve, and a push fit in the gear centre, lies the coupling for the fuel-injection pump drive. The coupling has holes with which engage three pegs projecting from the end of the half-speed shaft and is internally splined at its forward end to receive male splines on the pump-unit shaft. The pump unit is bolted to the outside of the front cover.

At the rearward end of the half-speed shaft, which is carried in two ball bearings in a Duralumin housing, is a bevel gear; with it mesh two bevel gears embodying short, hollow shafts which transmit the drive via solid shafts to the camshafts. The axes of the pair of bevels just described coincide in plan view but are inclined slightly downward in front elevation. Two closely spaced ball bearings support each bevel hollow shaft, the outboard end of which is internally splined. Lubrication of the gears is by splash from the big ends.

Engaging with the splines of the hollow shafts are male splines at the inboard end of the solid drive shafts. Each of the solid shafts has an integral bevel gear at its outer end and runs in a ball bearing pressed into the inboard half of a cast-iron housing. Split longitudinally in the vertical plane, the housing is held to the cylinder head by three pairs of studs; the two outer pairs also serve to retain the Elektron cam-box covers.

The camshaft drive-shaft cover tubes screw into the cylinder heads; their inboard ends have no positive location and are sealed by internally spring-loaded grommets, of synthetic rubber, fitting into counter-bores in the crankcase casting.

An unusual double-o.h.c. arrangement is employed. In the case of each cylinder head the two camshafts lie close together within the split housing and each operates its respective valve through a short, straight rocker. The scheme is a compromise between the single-o.h.c. and the conventional double-cam layouts because, although the reciprocating weight with the rockers is higher than with direct-operated valves, there is less power loss since two spur gears replace the usual five. Certainly the reciprocating-weight aspect cannot be serious since the engines can run up to 9,500 r.p.m.

The B.M.W. layout is, in fact, well adapted to a horizontally opposed engine. In the normal manner for a 180-degree twin, the cylinder axes are staggered in plan view (the left cylinder is the farther forward) and, as mentioned earlier, the camshaft drive shafts are in line. Thus the right shaft drives the forward camshaft and the left shaft drives the rearward camshaft.

Camshafts and rockers run on needle rollers; the outer races of the camshaft bearings are suitably grooved so that the camshaft-housing holding-down studs form cotters to prevent rotation of the races. In each case the camshaft bevel is integral with the coupling gear, and its end thrust is taken by flanged bronze collars. The rocker spindles are carried in the camshaft housings and have eccentric ends for valve-clearance adjustment.

The method of locking the rocker

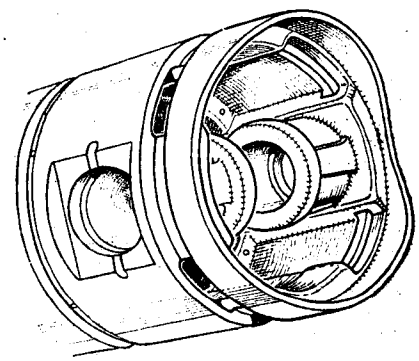

spindles is simple and ingenious: on one end of each spindle is a serrated washer which is located on the spindle by flats. With the serrations engage similar serrations on a short arm, the other end of which is bolted to the housing. If the bolt is slackened and the serrations are disengaged, the spindle can be turned by one serration or more and the serrations then re-engaged. For valve timing there is the usual vernier coupling between each camshaft and its driving gear. Valve overlap is equally disposed on each side of top dead centre and totals 120 degrees; the cams provide an opening of 320 degrees.

The rockers are I-section steel forgings, hardened in the bores, and are unorthodox in having cam-follower pads of chilled cast iron, a material which has proved exceedingly durable. A shrunk-in, dovetailed fit is employed for the pads, and the rockers are lightly peened over them on each side for security.

Owing to the close spacing of the camshafts, lubrication at each cylinder head is reduced to a single metering jet which sprays oil copiously on to the rubbing faces of cams and followers. The bevels and coupling gears are lubricated partly by splash and partly by oil from the crankcase which flows along the downwardly inclined camshaft-drive cover tubes.

Each cylinder head contains a part-spherical combustion space giving a fairly wide valve included angle of 82 degrees. The valve-seat inserts are shrunk in; manganese steel is the material of the inlet seat, and bronze is used for the exhaust seat. Both valve guides are of bronze which has a fairly high tin content.

Diameter of the tulip head of the inlet valve is 40mm and that of the stem is 8½mm; sodium cooled, the exhaust valve has a convex head of 36mm diameter and its stem diameter is 11mm. Duplex coil springs exert a load of 97 lb with the valves on their seats. To reduce overall engine width, a stepped form of split collet retains the light-alloy spring collars.

Downdraught angle of the inlet ports is 15 degrees and their bore at the flange is 32 mm. Mounted directly to each port is a flat box containing a guillotine-type throttle which gives an unobstructed inlet when fully open. The throttles are controlled by a double-drum twistgrip and are individually adjustable for synchronization. Air reaches the throttles by two long, tapering bellmouths attached to the throttle-box stubs by rubber hose and clips. From trumpet extremity to throttle measures approximately 8in, and from throttle to valve centre is about 4½in.

Sparking plugs (one per cylinder) are located above the cylinder axes and the fuel-injector nozzles below; their respective holes emerge into the combustion space on a common diameter between the valves, but the plug holes are canted to enable the plugs to clear the camshaft drive shafts. One plug thus points forward and the other rearward. Like the fuel pump, magneto and sparking plugs, the injector nozzles are of Bosch manufacture and have a minimum delivery pressure of about 570 lb sq in.

Fuel is gravity fed from the tank to a paper-cartridge filter mounted on the right of the crankcase above the cylinder. From the filter, petrol passes to the pump, which is of plunger pattern—very similar to the type used on compression-ignition engines. There is no direct, rider control of pump delivery.

In the pump body is a diaphragm which is subjected on one side to induction-pipe depression by means of a balance-pipe system connected to the two throttle boxes. Attached to the diaphragm is a rack-rod engaging with a gear on each of the two plungers. Movement of the diaphragm caused by opening or closing of the throttle thus rotates the plungers; such rotation varies the internal porting and with it the amount of fuel delivered by the plungers. Surplus fuel is pumped back to the tank. An adjusting screw permits basic setting of the mixture strength. Lubrication of the pump is effected by engine oil from a separate half-litre container.

To give plenty of time for the mixing of fuel and air, injection of petrol occurs appreciably before the end of the inlet stroke but the timing is not critical to within 10 degrees and is adjusted by means of slotted attachment-bolt holes in the pump body. Ignition timing is fixed

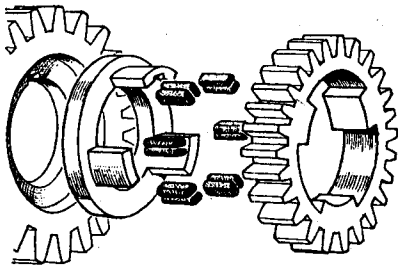

To avoid tooth overloading, the oil-pump driving gear embodies a simple shock-absorber

and is the same with fuel injection as it was when carburettors were employed (incidentally, the same applies to the compression ratio, which is 10.2 to 1).

Apart from providing a worthwhile gain in power—owing to the unobstructed induction system and the thorough atomization of fuel which occurs in the cylinder—fuel injection is stated to have given an improvement in specific fuel consumption of about 15 per cent; the consumption now obtainable on full load is 0.44 lb/b.h.p./hour—an extremely low figure.

Almost full skirted, the pistons have a scraper ring below the bosses for the taper-bored gudgeon pin. Three compression rings are fitted and the lowest has a taper face, with drainage holes to assist oil control. The piston crown is of nearly pent-roof shape and fits closely into the head space at each side to promote squish. To accommodate the contour of the valve heads, the valve cutaways are convex and concave respectively under the inlet and exhaust valves.

In each case a ground joint is employed between cyinder head and barrel; after the grinding-in is completed, six studs are screwed into the head. The head is then fitted to the barrel, the studs pass through bosses in the barrel, and on to them are screwed sleeve nuts having splined instead of hexagonal ends.

Owing to their advantageous cooling location, the B.M.W. cylinder barrels have very modest finning by current standards. Die-cast in light alloy, they normally have shrunk-in liners, but chromium-plated bores—plating direct on the aluminium—have been alternatively employed with complete satisfaction. The engine examined had liners; they have a spigot which enters about 1½in into the crankcase and is cut away fore and aft for connecting-rod clearance. Six studs secure each barrel to the crankcase.

A taper on the rear of the crankshaft accommodates a 22½cm-diameter flywheel clutch. The clutch body is in two halves which are held together by a ring of eight bolts; the inner face of the rear half forms one of the driving surfaces. Sandwiched between that face and the pressure plate is a single, fabric-faced driven plate; the plate has a splined centre which transmits the drive to the gear-box mainshaft.

The rear half of the clutch body has internal peripheral teeth with which engage similar external teeth on the pressure plate. Actuating force for the pressure plate is supplied by six non-adjustable springs seating in the front half of the clutch body. Clutch withdrawal is by means of a thrust rod passing through the hollow gear-box mainshaft; a hemispherical pad, jointed to the end of the rod, seats on a cup in the centre of the pressure plate.

Forward half of the clutch body has a spigot fitting into a bore in the back of the rear main-bearing housing. There is a leather oil-sealing ring within the bore, and the spigot has a spiral groove to assist in preventing oil from entering the clutch housing. Clutch cooling is effected by a series of concentric ribs on the back of the clutch body and by air ducts in the housing.

Of conventional, all-indirect design, the gear box has a top-gear reduction of 1.3 to 1 and normally has five ratios, although four have been used on certain circuits. The complete engine-gear unit is supported at three points in the frame: one each at front and rear of the lower portion of the crankcase, and a steady point above cylinder level in the crankcase half of the gear case.

The engine starts to run smoothly at about 4,000 r.p.m., begins to produce real power in the region of 6,500 r.p.m. and peaks at 9,000 r.p.m., at which speed it is stated to have an output of 58 b.h.p.

World Copyright

This article and its illustrations are exclusive to "The Motor Cycle," London, and must not be reproduced without the express permission of "The Motor Cycle"
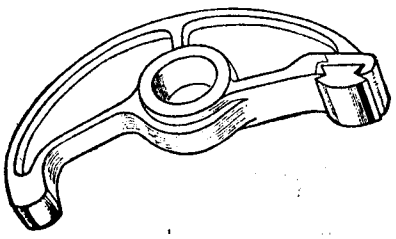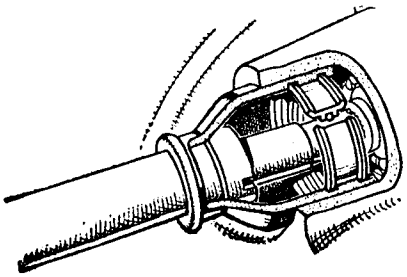
Below: The rockers are fitted with dovetailed-in, chilled-cast-iron pads. Right: Camshaft drive-shaft cover tubes are connected to the crankcase by spring-loaded, synthetic-rubber grommets